Parameter

Parameter			Value	
$_{DS}$				V
V_{GS}				V
I_D	Continuous Drain Current	T_C = 25°C	150	A
		T_C = 100°C	95	
I_{DM}	Pulsed Drain Current [1]		600	A
E_{AS}	Single Pulsed Avalanche Energy [2]		210	mJ
P_D	Power Dissipation	T_C = 25°C	89	W
$R_{\theta JA}$	95 Thermal Resistance, Junction to Ambient[3]		56	°C/W
$R_{\theta JC}$	Thermal Resistance, Junction to Case		1.40	°C/W
T_J, T_{STG}	Junction & Storage Temperature Range		-55 to 150	°C

Test Circuit

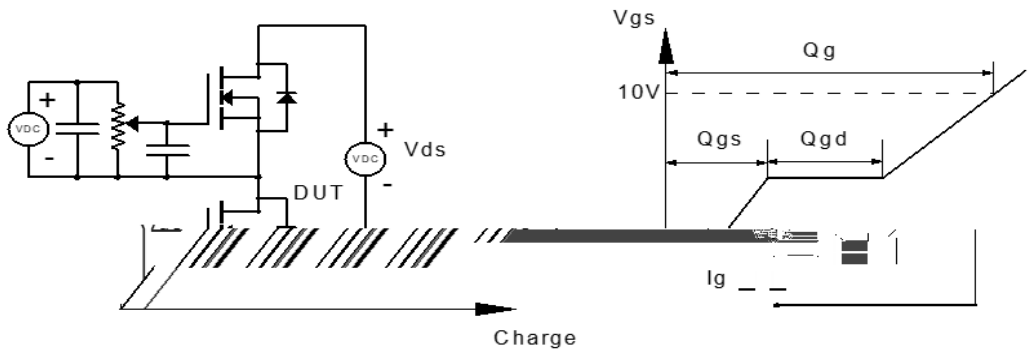

Figure 1: Gate Charge Test Circuit & Waveform

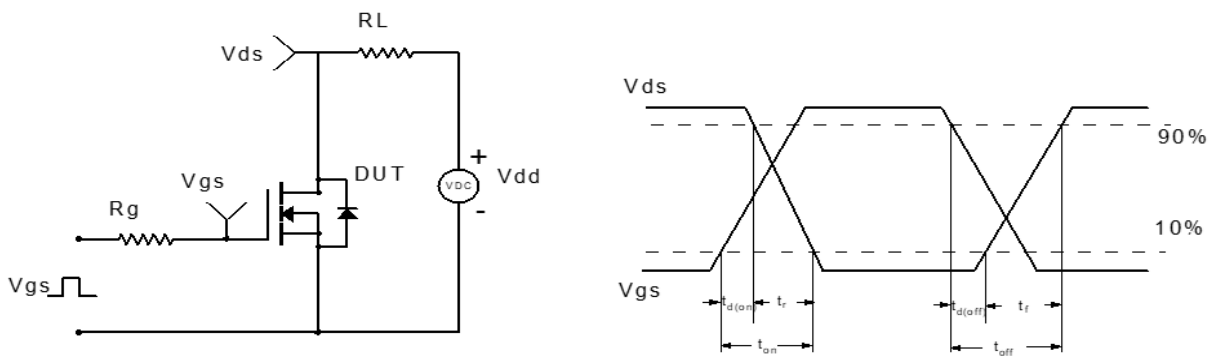

Figure 2: Resistive Switching Test Circuit & Waveform

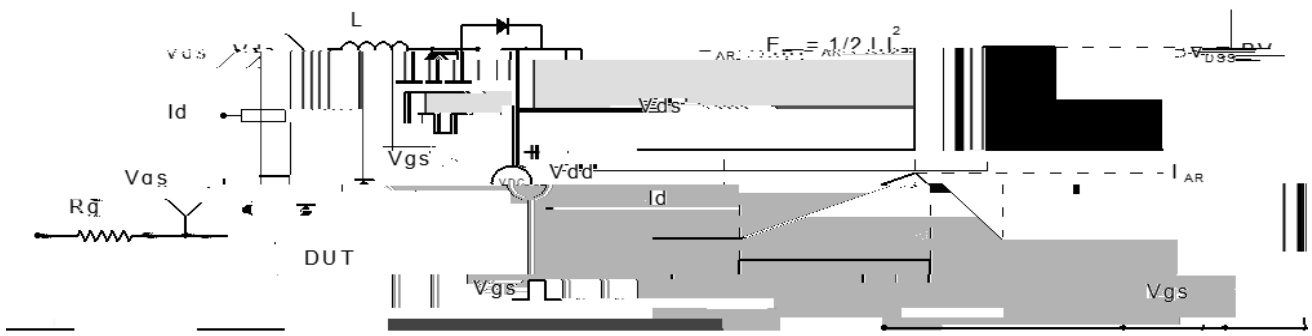

Figure 3: Unclamped Inductive Switching Test Circuit& Waveform

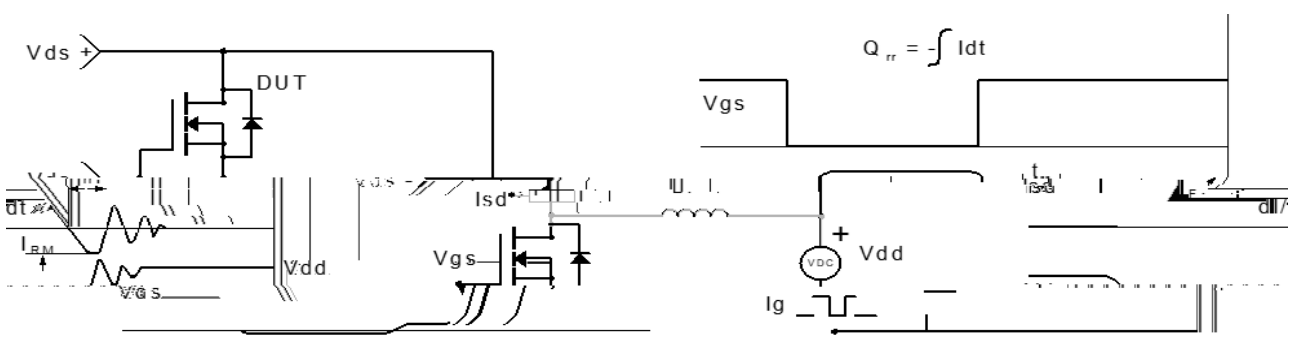

Figure 4: Diode Recovery Test Circuit & Waveform

Package Mechanical Data(TO-220C-3L)



Information furnished in this document is believed to be accurate and reliable.
However, Jiangsu JieJie Microelectronics Co.,Ltd assumes no responsibility for the consequences of use without consideration for such information nor use beyond it.
Information mentioned in this document is subject to change without notice, apart from that when an agreement is signed, Jiangsu JieJie complies with the agreement.
Products and information provided in this document have no infringement of patents. Jiangsu JieJie assumes no responsibility for any infringement of other rights of third parties which may result from the use of such products and information.

is a registered trademark of Jiangsu JieJie Microelectronics Co.,Ltd.
Copyright ©2023 Jiangsu JieJie Microelectronics Co.,Ltd. Printed All rights reserved.