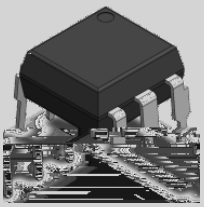
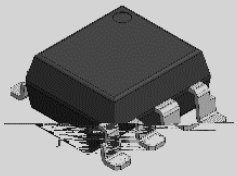
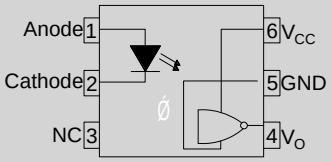
The products are 0.5MBd high-speed opto-couplers in a plastic DIP6 package with different lead forming options. The device combines an AlGaAs infrared emitting diode as the emitter which is optically coupled to a Schmitt Trigger detector.The products are widely used in logic to logic isolator, programmable current level sensor, line receiver- eliminate noise and transient problems, AC to TTL conversion- square wave shaping, digital programming of power supplies and interfaces computers with peripherals.



Wh/IDнл.π5ct



Wh/IDнл.π5c{



High isolation 5000 VRMS
Schmitt trigger output
Operating temperature range -40°C to 110°C
REACH & RoHS compliance
HBM: H3A; MM: M4; CDM:C3
CQC approved
VDE approved
UL approved

(Temperature=25°C)

Input	Forward Current	I_F	50	mA
	Peak Forward Current	I_{FP}	1	A
	Reverse Voltage	V_R	6	V
	Input Power Dissipation	P_D	100	mW
Output	Supply Voltage	V_{CC}	16	V
	Output Voltage	V_O	16	V
	Output Current	I_O	50	mA
	Output Power Dissipation	P_O	150	mW
Total Power Dissipation		P_{tot}	250	mW
Isolation Voltage		V_{iso}	5000	Vrms
Operating Temperature		T_{opr}	-40~110	

Junction Temperature	T_j	125	
Storage Temperature	T_{stg}	-55~150	
Soldering Temperature	T_{sol}	260	

: мллµă LJdzfăŜΣ мллlÎ ₣₪ŜIjdzŜyŎè

: ! / ₣Ƶℕ мY˙λyŒdzúŜΣ w¢lФΓплЧc₰ˆ˜

(Temperature=25°C)

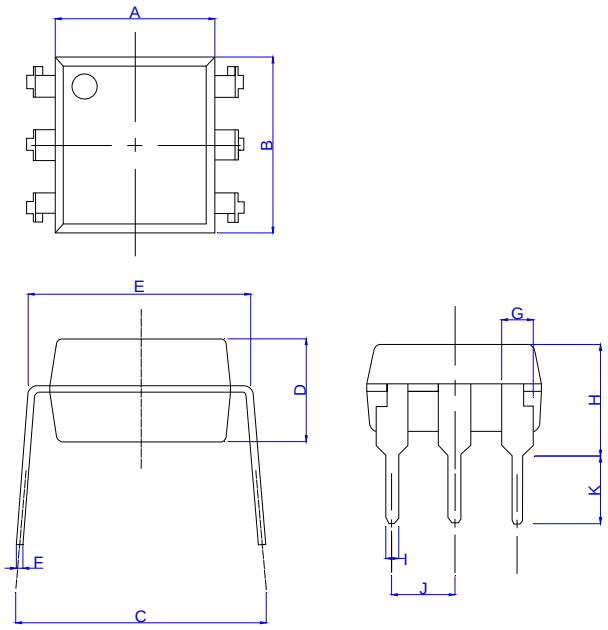
Input	Forward Voltage	V_F	I_F=10mA	-	1.35	1.6	V
	Reverse Current	I_R	V				

J OC H G 2 0 B -D6P/S /

JieJie Microelectronics Co., Ltd.

Opt ˥ ŷ Ч ~ ъS § þ È. ¯p

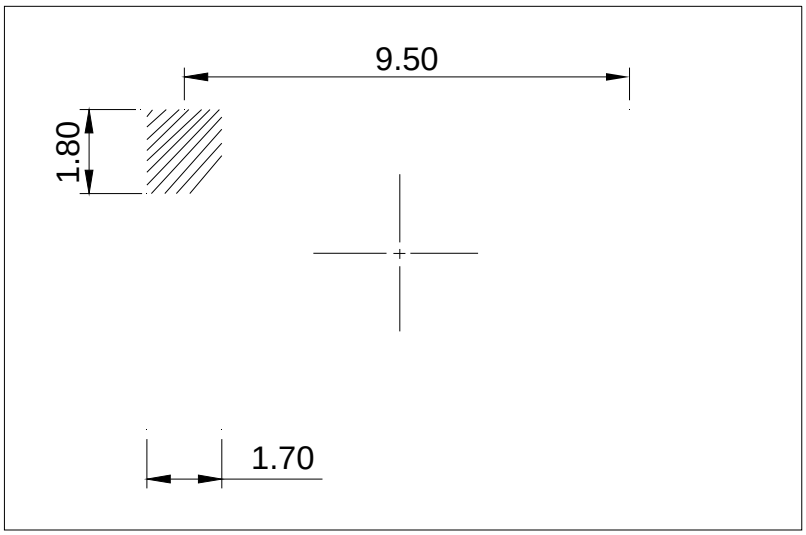
TEL +86-513-68528666

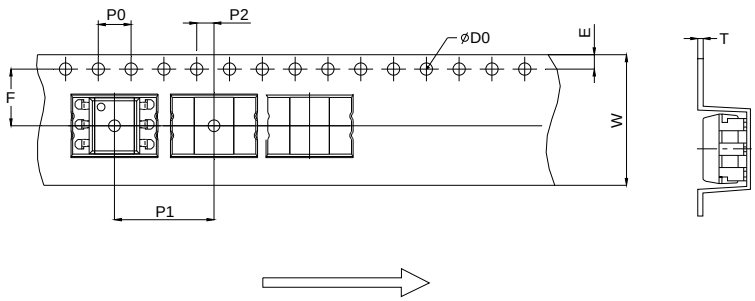


Ref.	Dimensions					
	Millimeters			Inches		
	Min.	Typ.	Max.	Min.	Typ.	Max.
A	6.20		6.60	0.244		0.260
B	6.92		7.32	0.272		0.288
C	7.15		8.95	0.281		0.352
D	3.20		3.60	0.126		0.142
E	7.32		7.92	0.288		0.312
F	0.15		0.35	0.006		0.014
G	1.15		1.35	0.045		0.053
H	3.90		4.50	0.154		0.177
I	0.40		0.60	0.016		0.024
J	2.29		2.79	0.090		0.110
K	2.24		3.24	0.088		0.128

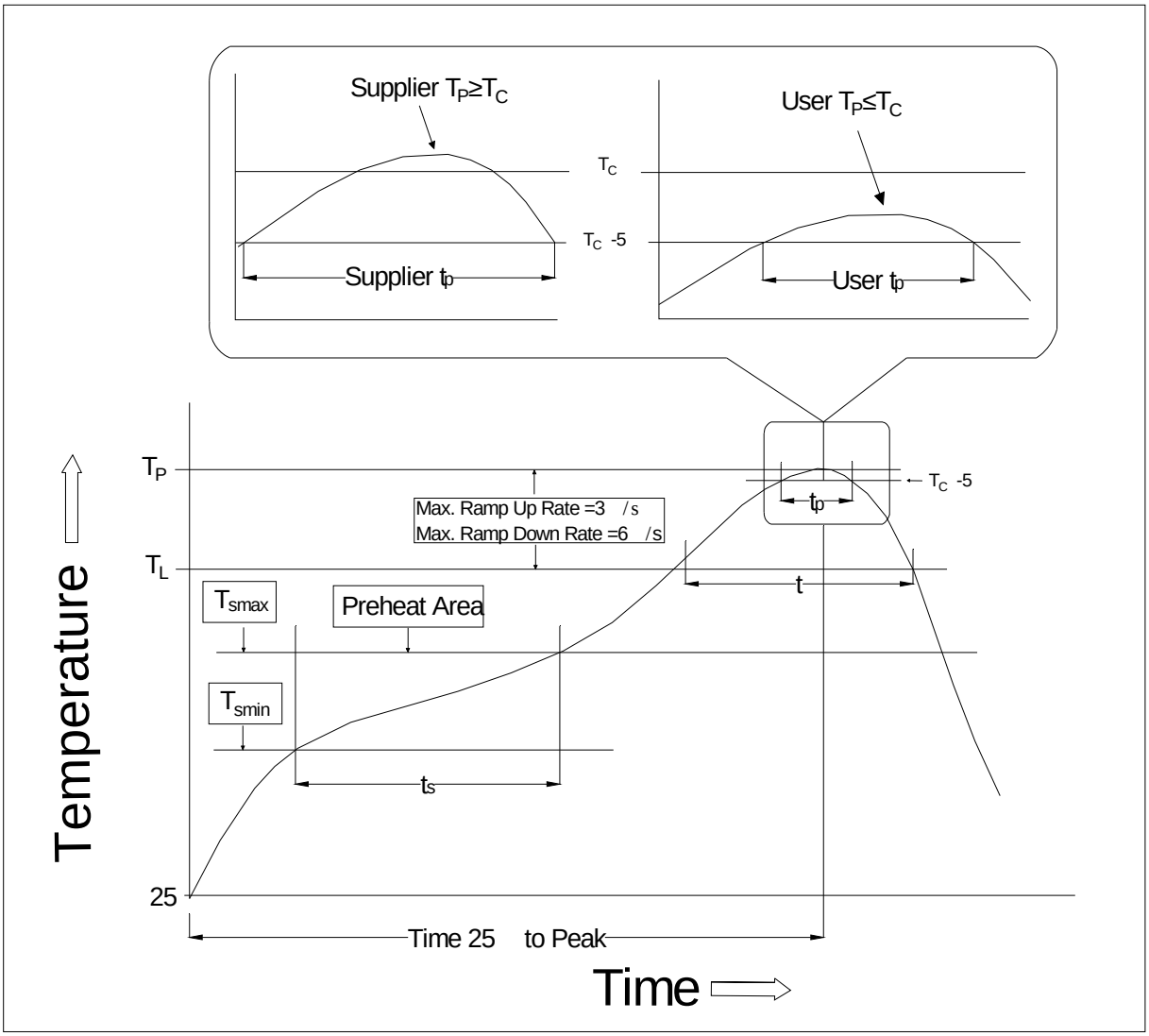
Dimensions

Ref.	Millimeters			Inches		
	Min.	Typ.	Max.	Min.	Typ.	Max.
A	6.20		6.60	0.244		0.260
B	6.92		7.32	0.272		0.288
C	9.50		10.50	0.375		0.413
D	3.20		3.60	0.126		0.142
E	7.32		7.92	0.288		0.312
F						
G						
HTy .142						
I	0.90		1.50	0.035		0.059
K						

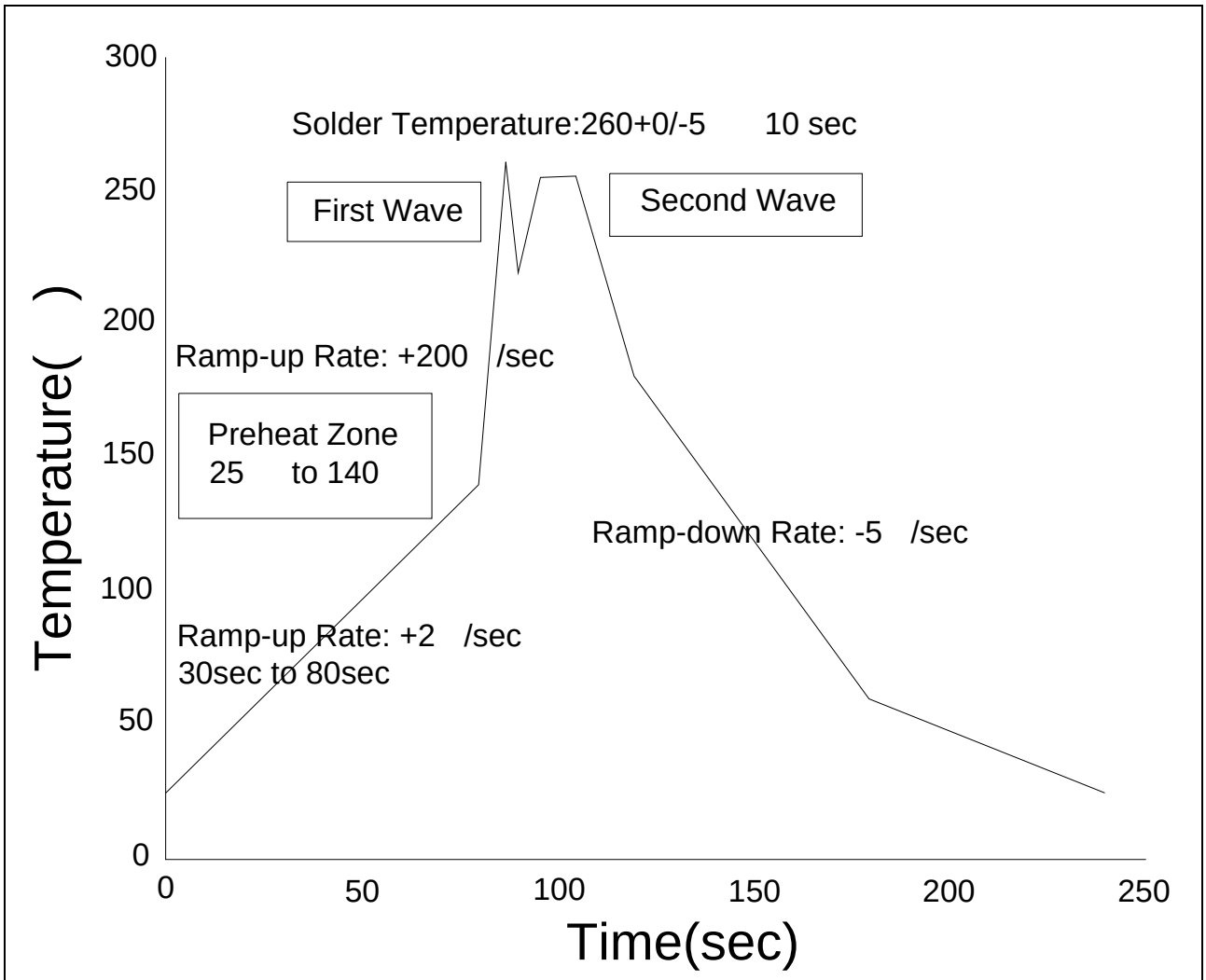

9.50
1.80
1.70



Ref.	Dimensions					
	Millimeters			Inches		
	Min.	Typ.	Max.	Min.	Typ.	Max.
D0		1.50	1.60		0.059	0.063
P0	3.90	4.00	4.10	0.154	0.157	0.161
P1	11.90	12.00	12.10	0.469	0.472	0.476
P2	1.90	2.00	2.10	0.075	0.079	0.083
E	1.65	1.75	1.85	0.065	0.069	0.073
F	7.40	7.50	7.60	0.291	0.295	0.299
T	0.35	0.40	0.45	0.014	0.016	0.018
W	15.70	16.00	16.30	0.618	0.630	0.642



Temperature Min. (Tsmin)	100	150
Temperature Max. (Tsmax)	150	200
Time (ts) from (Tsmin to Tsmax)	60-120 seconds	60-120 seconds
Ramp-up Rate (tL to tP)	3 /second max.	3 /second max.
Liquidus Temperature (TL)	183	217
Time (tL) Maintained Above (TL)	60-150 seconds	60-150 seconds
Peak Body Package Temperature	235 +0 /-5	260 +0 /-5
Time (tP) within 5 of 260	10 seconds	10 seconds
Ramp-down Rate (TP to TL)	3-6 /second	3-6 /second
Time 25 to Peak Temperature	6 minutes max.	8 minutes max.



Soldering Temperature	360 ± 5
Soldering Time	3s max.

Note:

1. Reflow soldering is recommended at the temperatures and times shown, no more than three times.

2. Avoid direct contact between the epoxy body and any tools or surfaces exceeding its maximum storage temperature.

3. Application of pressure on the epoxy body is prohibited at elevated temperatures. In specific scenarios, any applied force must not exceed 2.5N.

4. Ensure the component has cooled to ambient temperature before proceeding with any subsequent manufacturing steps.

5. The component has a shelf life of one year when stored under standard conditions.

6. Recommend storage Temp.: 0~40°C;

Recommend storage humidity: <60%;

MSL level: MSL 1

Information furnished in this document is believed to be accurate and reliable. However, Jiangsu JieJie Microelectronics Co., Ltd. assumes no responsibility for the consequences of use without consideration for such information nor use beyond it. Information mentioned in this document is subject to change without notice, apart from that when an agreement is signed, Jiangsu JieJie complies with the agreement.

Products and information provided in this document have no infringement of patents. Jiangsu JieJie assumes no responsibility for any infringement of other rights of third parties which may result from the use of such products and information. This document supersedes and replaces all information previously supplied.

is a registered trademark of Jiangsu JieJie Microelectronics Co., Ltd.

Copyright © 2026 Jiangsu JieJie Microelectronics Co., Ltd. All rights reserved.