$&-7 8 $75,$& 5HY $

^ Z/Wd/KEW

7KH $&-7 8 WULDF LV VXLWDEOH IRU JHQHUDO SXUSRVH $& VZLWFKLQJ ,W FDQ EH XVHG DV DQ 21 2)) IXQFWLRQ LQ DSSOLFDWLRQV VXFK DV KHDWLQJ UHJXODWLRQ LQGXFWLRQ PRWRU VWDUWLQJ DQG UHYHUVLQJ RU RSHUDWLRQ LQ OLJKW GLPPHUV RU WUDQVIRUPHU FRQWUROOHG FKH $&-7 8 HPEHGV D 796 VWUXFWXUH WR DEVRUE WKH LQGXFWLYH WX HQHUJ\ VXFK DV WKRVH GHVFULEHG LQ WKH ,(& VWDQGDUGV 3DFNDJH 72 LV 5R+6 FRPSOLDQW

D /E & dhZ ^

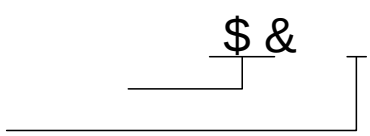
^K>hd D y/DhD Z d/E'^

3DUDPHWHU	6\PERO	9DOXH		8QL
6WRUDJH MXQFWLRQ WHPSHUDWXUH UDQJH	VWJ	7		

3HDN SXOVH YROWDJH 7M QRQ UHSHWLWLYH RII VWDWH),*	9SS		

> dZ/ > , Z d ZŒ^d/XQOHVV RWKHUZLVH VSHFLILHG

KZ Z/E' /E&KZD d/KE



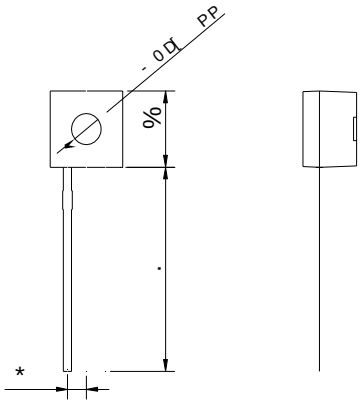
), * ÙÐ[LPXPêSRZHU GLVVLSDWLRQ YHUVX"""""""""""""""""""""""""""%0Ð U AF™€""%G ""

$ & - 7 8

KZ Z/E' /E&KZD d/KE

2UGHU FR	9ROWDJH 9'50 9350 9	,*7 P$	3DFND	%DVH SFV	'HOLYHU\ PRGH
$&-7 8			72		%XON 3DFN
$&-7 8 75					7DSH 5HHO

W < ' D , E/ > d



$ & - 7 8

,QIRUPDWLRQ IXUQLVKHG LQ WKLV GRFXPHQW WR EH DFFXUDWH D
-LDQJVX -LH-LH 0LFURHOHFWURQLFV &RUSRUDWLRQ &RSSULJKW\ IRU
RI XVH ZLWKRXW FRQVHQW IRU LVVXDQFH RU UHSURGXFWLRQ RI
LQ WKLV GRFXPHQW MD[DQG JHQHUDWLRQ WHFKQRORJLHV DSDUW IURP W
VLJQHG -LDQJVX -LH-LH 0LFURHOHFWURQLFV &RUSRUDWLRQ
3URGXFWV DQG LQIRUPDWLRQ GSRUFRXPHQW KDYH QR LQIUL
-LDQJVX -LH-LH DVVXPHVOLQR\UHVSRQVLRQWKHQJUHPJHQWV RI WK
SDUWLHV ZKLFK PDH UHVXOWVXRIWVXFKSWUDQVDFWLRQ7KLVQGRFXPH
VXSHUVHGHV DQG UHSODFHV DOO LQIRUPDWLRQ SUHYLRXV
LV D UHJLVWHUHGQJXGHLPDUN RI-LR H/WHGF WURQLFV &