^ Z/Wd/KEW

7KH 7 +) WULDF LV VXLWDEOH IRU JHQHUDO SXUSRVH $
VZLWFKLQJ ,W FDQ EH XVHG LQ
DSSOLFDWLRQV VXFK DV WKH FRQWURO RI GXW\ FUF\FOH PRWRU
VWDUWLQJ FLUFXLWV IRU SKDVH FRQWURO RSHUDWLRQ LQ
PRWRU VSHHG FRQWUROOHUV &RPSDUHG WR WUDGLWLRQD
7 +) SURYLGHV D YHU\ KLJK VZLWFKLQJ FDSDELOLW\ XS
MXQFWLRQ WHPSHUDWXUHV DQG H[WHUQDO SODVWLF
SDFNDJH 7 +) SURYLGHV D UDWHG LQVXODWLRQ YROWD
9506 FRPSO\LQJ WKURXJK)LOH UHI (
3DFNDJH 72) LV 5R+6 FRPSOLDQW

D /E & dhZ ^

6\PERO	9DOXH	8QLW
,7 506		
9'50 9$50		9
,*7		P$

$

^K>hd D y/DhD Z d/E'^

3DUDPHWHU	6\PERO	9DOXH		8QL
6WRUDJH MXQFWLRQ WHPSHUDWXUH RQ WHUPDQJHVWJ		7		
2SHUDWLQJ WHPSHUDWXUH UDQJH		7		
5HSHWLWLYH SHDN RII VWDWH 9 YROWDJH 7			9	
5HSHWLWLYH SHDN UHYHUVH 9 YROWDJH 7			9	
506 RQ VWDWH &FXUUHQW 7 7, 506				$
1RQ UHSHWLWLYH VXUJH SHDN RQ VWDWH FXUUHQW IXOO F\FOH PW	,760		$	
1RQ UHSHWLWLYH VXUJH SHDN RQ VWDWH FXUUHQW IXOO F\FOHPV W7				
,W YDOXH IRU PXVW QJ W	,W		$ V	
&ULWLFDO HDWH RW DWWHFXUUHQW ;h,*7 I +] 7	G, GW		$ V	
3HDN JDWH FXUUHQW W	;0		$	

$YHUDJH JDWH SRZHU GLVVLSDWLRQ 7			
3HDN JDWH SRZHU	3		:
3HDN SXOVH YROWDJH 7 QRQ UHSHWLWLYH RII VWDWH),*	9		

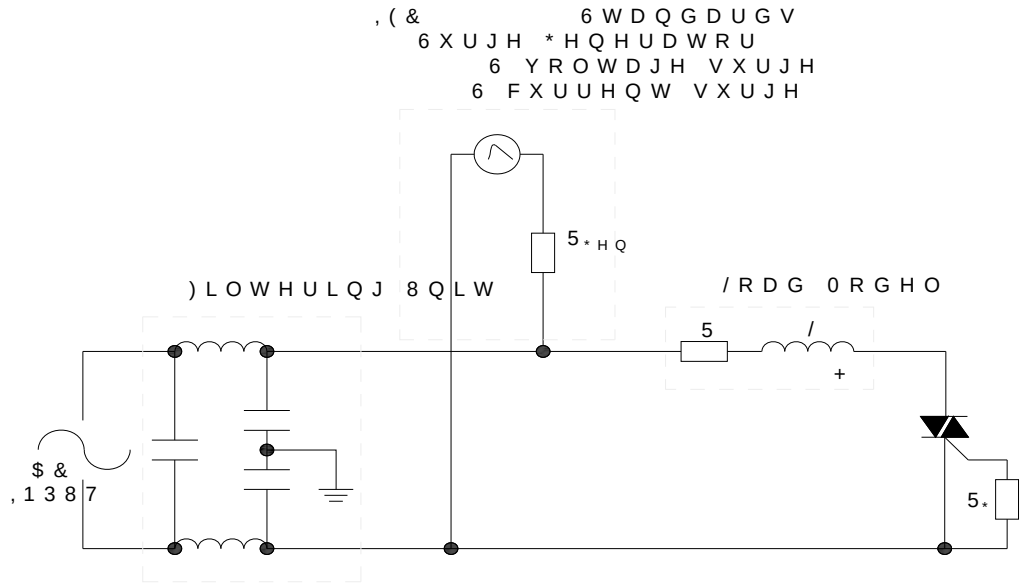
> dZ/ > , Z d Z ^d/ ^QOHVV RWKHUZLVH VSHFLILHG

6\PERO	7HVW &RQGLWLRQ		4XDGUDQW		9DOXH
,* 7	9 9 5		0$;		P$
9* 7			0$;		9
9* '	9 9 50 7 5 N		0,1		9

7 +) -LH-LH 0LFURHOHFWURQL

7 +)

),* Ö7HVW FLUFXLW IRU LQGXFWLYH DQG VWDWLF ORDGV



> &KZD/E' E ^K> Z/E'

5HIHU WR WKH DSSOLFDWLRQ QRWH 3RZHU 0LFURHOHFWURQLFV 7HFKQRORJLHV 3DFNDJH -LH-DH] Œ} o šŒ}v] •X

KZ Z/E' /E&KZD d/KE

2UGHU FF	9ROWD 9'50 9550 9	,*7 P$	3DFNDJH	%DVH T SFV	'HOLYHU\ PRGH
7 +)			72) ,QV		7XEH

'RFXPHQW 5HYLVLRQ +LVWRU\

'DWH	5HYLVLRQ	&KDQJHV
$SU	$	/DVW XSGDWHG
2FW	$	5HYLVHG &$*(0(&+$1,&$/ '$7$

W < ' D , E/ > d



,QIRUPDWLRQ IXUQLVKHG LQ WKLV GRFXPHQW LV EHOLHYHG WR EH DFFXUDWH +
-LDQJVX -LH-LH 0LFURHOHFWURQLFV &RUS DQG LWV VXEVLGLDULHV 2XU SURGXFWV DUH
RI XVH ZLWKRXW FRQVLGHUDWLRQ IRU XSJUDGHV DQG WKH DFKLHYHPHQW RI
LQ WKLV GRFXPHQW LV VXEMHFW WR FKDQJH ZLWKRXW QRWLFH 1HLWKHU WKH
VLJQHG -LDQJVX -LH-LH 0LFURHOHFWURQLFV &RUS QRU DQ\ RI LWV
3URGXFWV DQG LQIRUPDWLRQ SURYLGHG LQ WKLV GRFXPHQW
-LDQJVX -LH-LH DVVXPH QR OLDELOLW\ DULVLQJ RXW RI WKH DSSOLFDWLRQ
SDUWLHV ZKLFK PD\ UHVXOW IURP WKH XVH RI WKLV GRFXPHQW
VXSHUVHGHV DQG UHSODFHV DOO LQIRUPDWLRQ SUHYLRXV
LV D UHJLVWHUHG WUDGHPDUN RI -LDQJVX -LH-LH 0LFURHOHFWURQLFV &
&RS\ULJKW -LDQJVX -LH-LH 0LFURHOHFWURQLFV &RUS /WG $OO ULJKWV UHVL