-67) &: $ 75,$& 5HY $

1

^ Z/Wd/KEW

7KH -67) &: WUXLDVEHV IRU JHQHUDO SXUSRVH $& VZLWFKLQJ ,W FDQ EH XVHG DV DQ 21 2)) IXQFWLRQ LQ DSSOLFDWLRQV WKHUHDWWKLHDWLQGXFWLRQ PRWRU VWDUWLQJ FLUFXLWV RU DV SDUW RI D SKDVH DQWLFRQ LQ OLJKW GLPPHUV PRWRU VSHHG FRQWUROOHUV -67) &: VQXEEHUOHVV WULDFV HOLPLQDWH WKH QHHG IRU VHSDUDWH IRU XVH RQ LQGXFWLYH ORDGV DQG SURYLGHV D UHOLDEOH DQG FRVW HIIHFWLYH -67) &: SURYLGHV D UDWHG LQVXODWLRQ YROWDJH RI 9506 FRPSO\LQJ ZLWK 8/ VWDQGDUGV)LOH UHI (3DFNDJH 72) LV 5R+6 FRPSOLDQW

D /E & dhZ ^

6\PERO	9DOXH	8QLW
,7 506		
9'50 9$50		9
,*7		P$

$

^K>hd D y/DhD Z d/E'^

3DUDPHWHU	6\PERO	9DOXH		8QL
6WRUDJH MXQFWLRQ WHPSHUDWXUH UDQJH	VWJ	7		
2SHUDWLQJ WHPSHUDWXUH UDQJH	UDQJH	7		
5HSHWLWLYH SHDN RII VWDWH YROWDJH	7		9	
5HSHWLWLYH SHDN UHYHUVH YROWDJH	7		9	
506 RQ VWDWH FXUUHQW	7 ,7 506			$
1RQ UHSHWLWLYH VXUJH SHDN RQ VWDWH FXUUHQW IXOO F\FOH PD[	,760		$	
1RQ UHSHWLWLYH VXUJH SHDN RQ VWDWH FXUUHQW				
,W YDOXH IRU PXOWLQJ W	,W		$ V	
&ULWLFDO UDWH RI ULVH RI RII VWDWH FXUUHQW ; h ,*7 I +] 7	G, GW		$ V	
3HDN JDWH FXUUHQW W	,*0		$	
$YHUDJH JDWH SRZHU GLVVLSDWLRQ 7	3*9			:

3HDN JDWH SRZHU	3*0		:
3HDN SXOVH YROWDJH 7M QRQ UHSHWLWLYH RII VWDWH),*	9SS		

> dZ/ > , Z d Z/^d/X^QOHVV RWKHUZLVH VSHFLILHG

6\PERO	7HVW &RQGLWLRQ		4XDGUDQW		9DOXH
,*7	9' 9 5		0$;		P$
9*7			0$;		9
9*'	9' 9'50 7M 5/ N		0,1		9
,/	,* *;7		0$;		P$
,+	,7 P$		0$;		P$
G9 GW' 99 *DWH 2SHQ 7			0,1		9 V
G, GW F G9 GW F 9 V			7	0	, 1
WQ	,* P$ $, P$ 5, P$ 7M		7<3		V
WI					

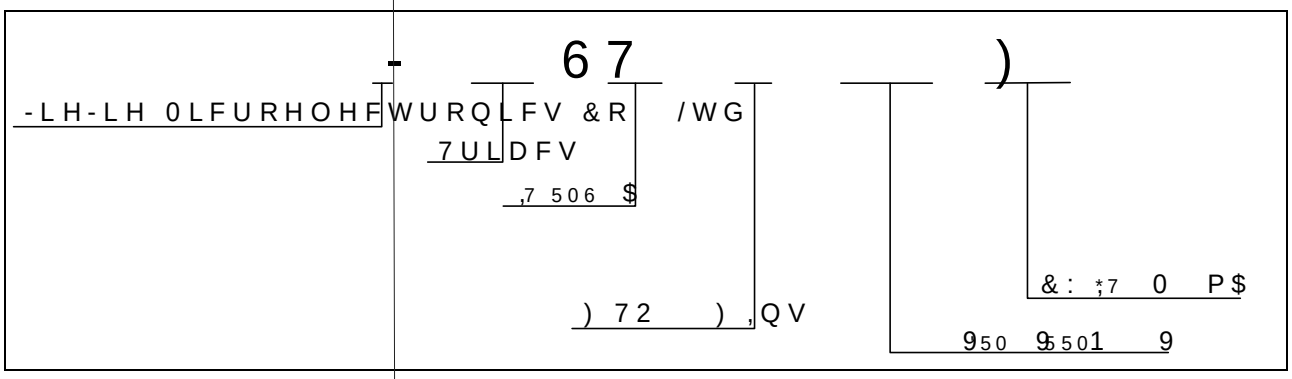
^d d/ , Z d Z/^d/ ^

6\PERO	3DUDPHWHU		9DOXH 0$;		8QLW
970	70 $ W V	7M		9	
972	7KUHVKROG YROWDJH	M	7	9	
5'	'\QDPLF UHVLVWDQFH	M	7	P	
,'50	9' 9'50 9 9550	7M			
,550		7M		P$	

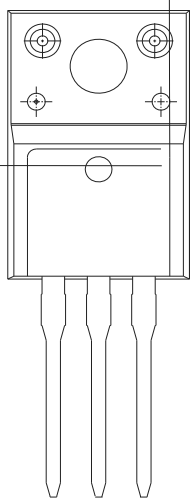
d, ZD > Z ^/^d E ^

6\PERO	3DUDPHWHU	9DOXH		8QLW
5WK M	FMXQFWLRQ WR FDVH $&		:	
5WK M	DMXQFWLRQ WR DPELHQW $&		:	

KZ Z/E' /E&KZD d/KE

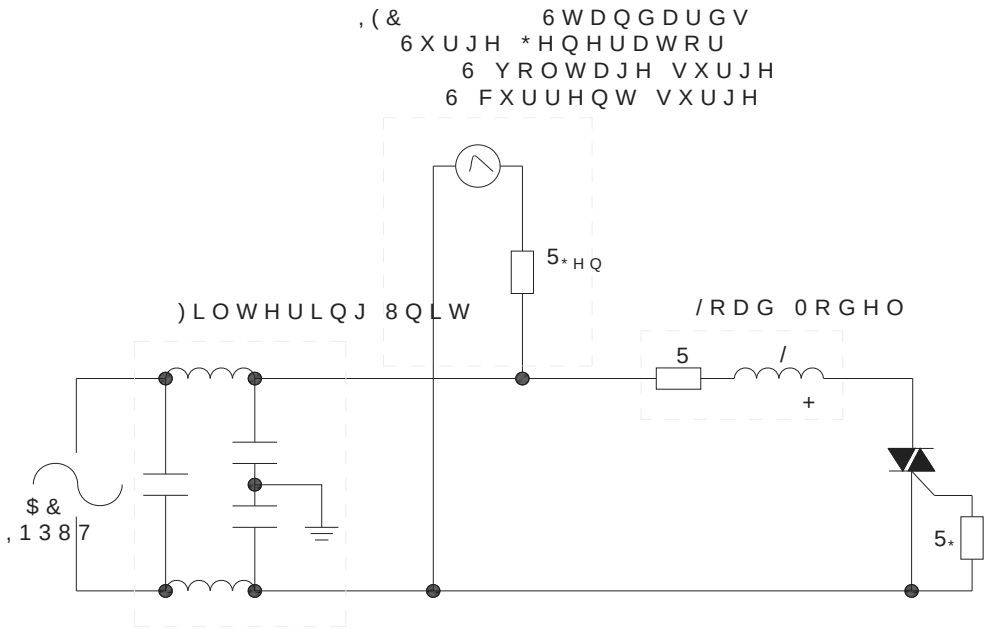


D Z</E'



5p0p6 R Q pPupt@upt€p0t`u€uPuPt€u upp0u•t€uPu`u€u`p0t`t@u`t€p0

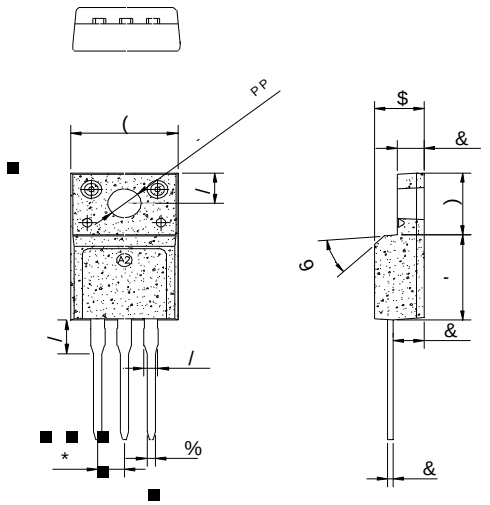
),* Ö7HVW FLUFXLW IRU LQGXFWLYH DQG VWUDLQHG OR



> &KZD/E' E ^K> Z/E'

5HIHU WR WKH DSSOLFDWLRQ QRWH 1SRVW PLED\7KQVWUXFKWLRQRI3DFNDJH -LH-DH] Œ} o šŒ}v] •X

W < ' D , E/ > d



'LPHQVLRQV

5HI	0LOOLPHWHUV ,QFKHV			
	0LQ	7\S	0D[	0LQ 7\S 0D[
$				
%				
&				
&				
&				
'				
(				
)				
*				
+				
/				
/				
/				
9				

tÉ ArP –

P tÉ Ar=` 0

,QIRUPDWLRQ IXUQLVKHG LQ WKLV GRFXPHQW LV EHOLHYHG WR EH DFFXUDWH +
-LDQJVX -LH-LH 0LFURHOHFWURQLFV &RRS\ULJKW -LH-LH 0LFURHOHFWURQLFV &R /WG DOO UHVSHFWLYH ULJKWV UHV
RI XVH ZLWKRXW FRQVLGHUDWLRQ IRU GLVWULEXWLRQ RU PDQXIDFWXULQJ LV
LQ WKLV GRFXPHQW LV VXEMHFW WR FKDQJH ZLWKRXW QRWLFH 7KLV GRFXPHQ
VLJQHG -LDQJVX-LHHVLZHLPRKPWKH DJUHHPHQW
3URGXFWV DQG LQIRUPDWLRQ SURYLGHG LQ WKLV GRFXPHQW
-LDQJVX -LH-LH DVVXPHV QR UHVSRQVLELOLWLHV \UHVSRQVLELOLWLHV
SDUWLHV ZKLFK PD\ UHVXOW IURP WKH XVH RI WKLV GRFXPHQW V7KLV GRF
VXSHUVHGHV DQG UHSODFHV DOO LQIRUPDWLRQ SUHYLRXV
LV D UHJLVWHUHG DQGJUDG-HLHD-UHN ORLF-LR H/WHG WURQLFV &
&RS\UkJKW -LDQJVX -LH-LH 0LFURHOHFWURQLFV &R /WG $OO RLJKWV UHVL