-67 + ' $ 75,$& 5HY $

> dZ/ > , Z d Z/^d/XQOHVV RWKHUZLVH VSHFLILHG

6\PERO	7HVW &RQGLWLRQ		4XDGUDQW		9DOXH
,* 7	9' 9 5/		0$;		P$
9* 7		$//	0$;		9
9* '	9' 9'50 7M 5/ N	$//	0,1		9
,/	,* *;7		0$;		P$
,+	,7 P$		0$;		P$
G9 GW' 99 *DWH 2SHQ 7			0,1		9 V
G9 GW F G, GW F $ PV 7			0,1		9 V
WQ	,* P$ $, P$ 5, P$ 7M		7<3		V
WII					

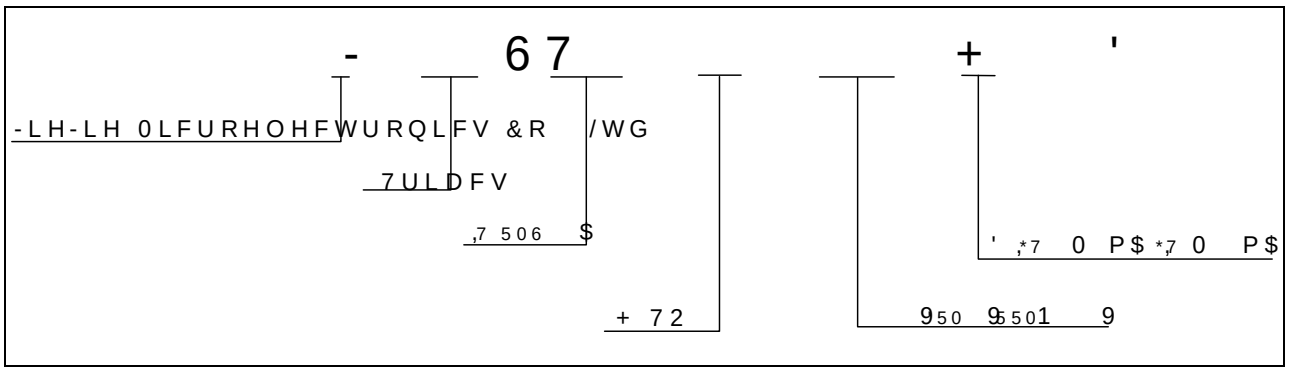
^d d/ , Z d Z/^d/ ^

6\PERO	3DUDPHWHU	9DOXH 0$;	8QLW
970	70 $,W V	7M	
972	7KUHVKROG YROWDJH 7	M	
5'	'\QDPLF UHVLVWDQFH 7	M	P
,'50	9' 9'50 9 9550	7M	
,550		7M	

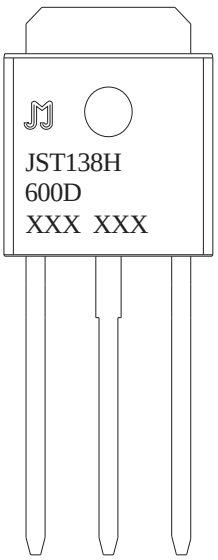
d, ZD > Z ^/^d E ^

6\PERO	3DUDPHWHU	9DOXH	8QLW
5WK M F	MXQFWLRQ WR FDVH $&		:
5WK M D	MXQFWLRQ WR DPELHQW $&		:

KZ Z/E' /E&KZD d/KE



D Z</E'



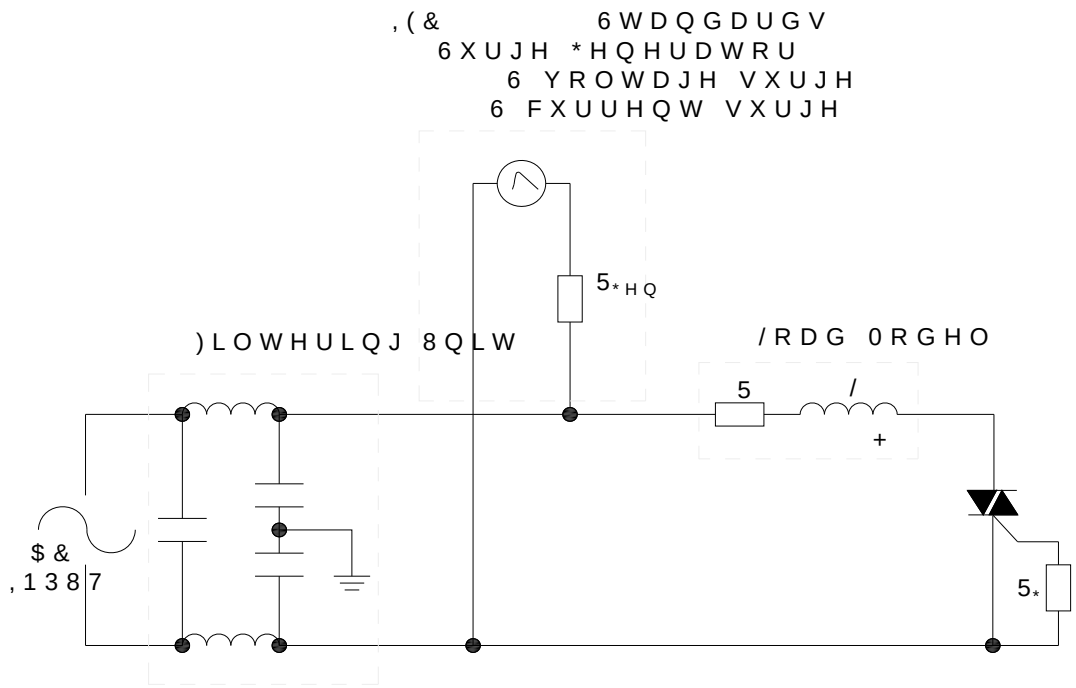
XXX XXX

<HDU
0RQWK

3URGXFWLRQ
&RGH–•)À a y 0 œÂ c~ð•

),* 0D[LPXP SRZHU GLVVLSDWLRQ Y)H*UV5X0/6 5R0 VWDWH FXUUHQW YH
RQ VWDWH FXUUHQW WHPSHUDWXUH

)LJ 7HVW FLUFXLW IRU HVWLPDWLQJ WKH EHQHILWV RI DGGLQJ VWDQGDUGV



> &KZD/E' E ^K> Z/E'

5HIHU WR WKH DSSOLFDWLRQ QRWH 1RVWDVVHPEOLQJ \7KURXJKRXW WKH FRQVWUXFWLRQ RI DFFXUDJH

-LH-DH] Œ} o šŒ}v] •

,QIRUPDWLRQ IXUQLVKHG LQ WKLV GRFXPHQW LV EHOLHYHG WR EH DFFXUDWH D
-LDQJVX -LH-LH 0LFURHOHFWURQLFV &R\ I/RUG WDKVHVXFRHQW HQTRX
XVH ZLWKRXW FRQVHQW RU RWKHUZLVH XQGHU DQ\ FRU XVH EH\RQG LW ,
WKLV GRFXPHQW DQG DQ\ EXVLQHVV RU FRPPHUFLDO XVH RI WKLV GRFXPHQW
VLJQHG -LDQJVX -LH-LH DVVXPHV LHVSRQVLELOLWLHV RU OLDELOLWLHV
3URGXFWV DQG LQIRUPDWLRQ GLVFXVVHG LQ WKLV GRFXPHQW KDYH QR LQIULQJ
-LDQJVX -LH-LH DVVXPHV QR OLDELOLWLHV DULVLQJ RXW RI WKH
SDUWLHV ZKLFK PDNH UXVH RI WKH LQIRUPDWLRQ RQ WKLV GRFXPHQW
VXSHUVHGHV DQG UHSODFHV DOO LQIRUPDWLRQ SURYLGHG
LV D UHJLVWHUHG DQGJXDG-HLPHD-UHN ORLF-ULR H/OWHG F WURQLFV &
&RS\ULJKW ‹ -LDQJVXRHLOHHEWURQLFV U/HVHUYHG