-67 + ($75,$& 5HY $

^ Z/Wd/KEW

7KH -67 + (WULDF LV VXLWDEOH IRU JHQHUDO SXUSRVH $& VZLWFKLQJ ,W FDQ EH XVHG DV DQ 21 2)) IXQFWLRQ LQ DSSOLFDWLRQV VXFK DV WKH FRQWUROOLQJ PRWRU VWDUWLQJ FLUFXLWU RI SRZHU WRROV DSSOLDQFHV LQ OLJKW GLPPHUV PRWRU SHHG FRQWUROOHUV)OXRUHVFHQW WUDQVIRUPHUV 7HOHFRPPXQLFDWLRQV 3RFNHW FRPSXWHUV WR H[WHUQDO KHDWLQJ V\VWHPV

D /E & dhZ ^

6\PERO	9DOXH	8QLW
,7 506		$
9'50 9550		9
,*7		P$

^K>hd D y/DhD Z d/E'^

3DUDPHWHU	6\PERO	9DOXH	8QLW
6WRUDJH MXQFWLRQ WHPSHUDWXUH UDQJH	VWJ	7	
2SHUDWLQJ WHPSHUDWXUH UDQJH	M	7	
5HSHWLWLYH SHDN RII VWDWH YROWDJH	9	7	9
5HSHWLWLYH SHDN UHYHUVH YROWDJH	9	7	9
506 RQ VWDWH FXUUHQW	,7 506		$
1RQ UHSHWLWLYH VXUJH SHDN RQ VWDWH FXUUHQW IXOO FSFOH	,760		$
1RQ UHSHWLWLYH VXUJH SHDN RQ VWDWH FXUUHQW			
,W YDOXH IRU PXVWQJ W	,W		V$
&ULWLFDO UDWH RI ULVH RI RII VWDWH FXUUHQW ; h,*7 I +] M 7	G, GW		$ V
3HDN JDWH FXUUHQW W	,*0		$
$YHUDJH JDWH SRZHU GLVVLSDWLRQ 9 7			
3HDN JDWH SRZHU	3*0		:
3HDN SXOVH YROWDJH 7 QRQ UHSHWLWLYH RII VWDWH	9SS),*		

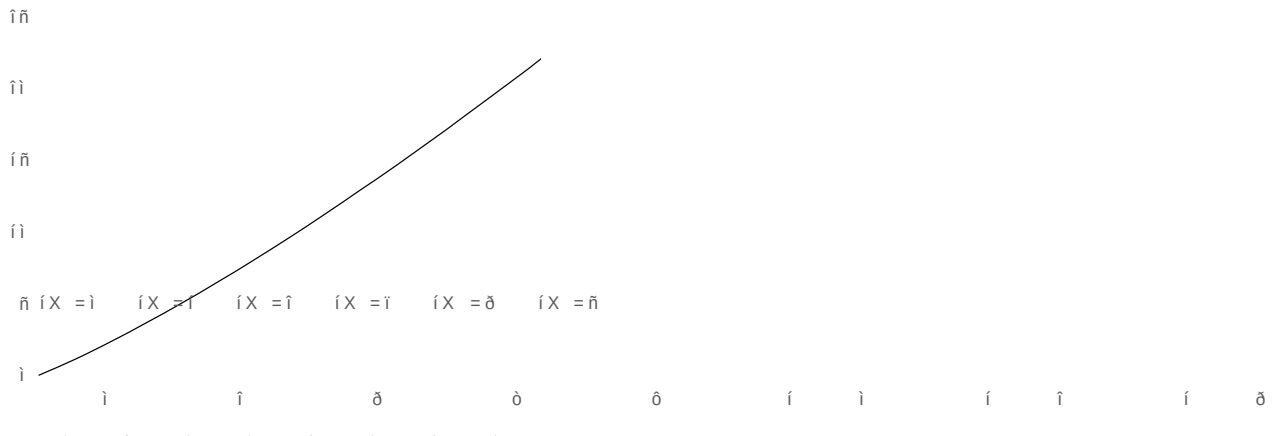
> dZ/ > , Z d Z/^d/XQOHVV RWKHUZLVH VSHFLILHG

6\PERO	7HVW &RQGLWLRQ		4XDGUDQW		9DOXH
,*7	9' 9 5		0$;	P$	
9*7		$//	0$;	9	
9*'	9' 9'50 7M 5/ N	$//	0,1	9	
,/	,* *;7		0$;	P$	
,+	,7 P$		0$;	P$	
G9 GW' 99 *DWH 2SHQ 7			0,1	9	V
G9 GW F G, GW F $ PV 7			0,1	9	V

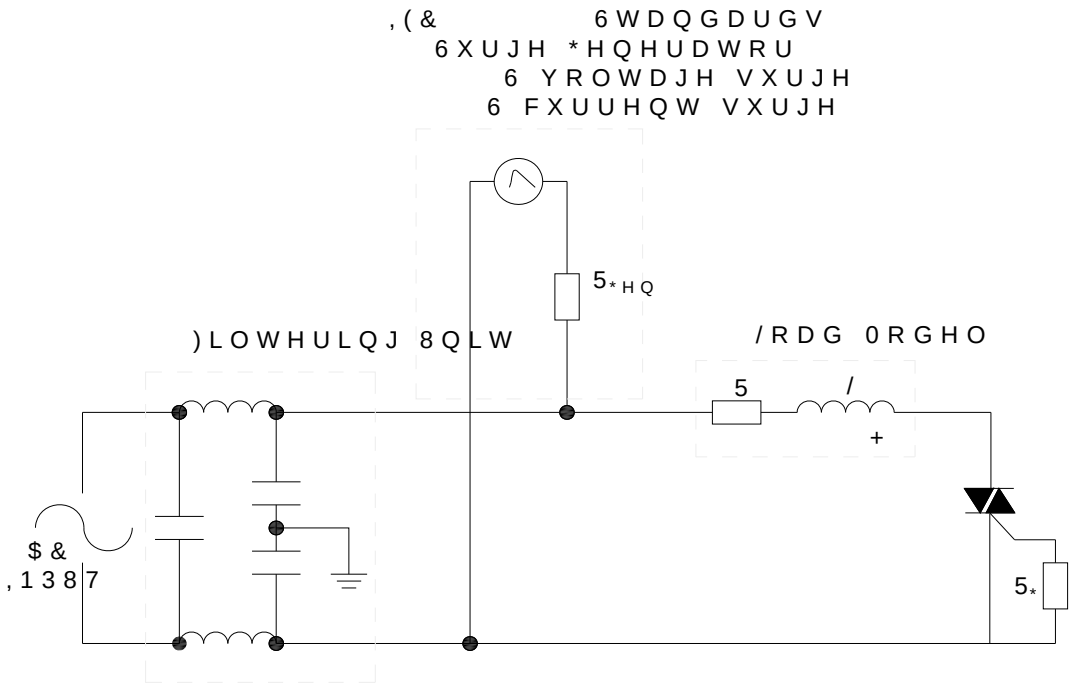
WQ ,* P$ $, P$ 5, P$

7€7D•K)$h6E M

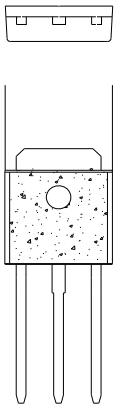
),* 0D[LPXP SRZHU GLVVLSDWLRQ Y)H*UV5X0/6 5RG VWDWH FXUUHQW YH
RQ VWDWH FXUUHQW WHPSHUDWXUH



)LJ Ö 7HVW FLUFXLW IRU HVWLPDWLQJ WKH RDGLQJ WKRD,Q&G DUGV



W < ' D , E/ > d



,QIRUPDWLRQ IXUQLVKHG LQ WKLV GRFXPHQW WR EH DFFXUDWH D
-LDQJVX -LH-LH 0LFURHOHFWURQLFV &R\ I/RUG WDKVHVXFRKQW HQTRX
XVH ZLWKRXW FRQVHQW RU RWKHUZLVH RQ QRQ XVH EH\RQG LW ,
WKLV GRFXPHQW WKDQ JXEZLMVFKRXWR QFRKDLWHZKDHSQDDQ DUJHPHWP H
VLJQHG -LDQJVX-LHH\LZHLVRKPWKH DJUHHPHQW
3URGXFWV DQG LQIRUPDWWKLRQ GSURFXYLHGQHG KDYH QR LQIULQJ
-LDQJVX -LH-LH DVVXPEHLVOQWR\UHRVSRQVLRQWKHQJHPHQW RI WI
SDUWLHV ZKLFK PHH UXHVXOWVXRIWVXFKPSWEHDWWRQDQ7KLVQGRF XPH
VXSHUVHGHV DQG UHSODFHV DOO LQIRUPDWLRQ SUHYLRXV
LV D UHJLVWHUHGQJXGHLPHUN RLF-LRH/OWHGFWURQLFV &
&RS\ULJKW ‹ -LDQLJFXRHLOHHEWURQLFVU\K&RV U/HWGHU$YOHG