-67) &: $ 75,$& 5HY $

^ Z/Wd/KEW

7KH -67) &: WUXLDVFDEOHV IRU JHQHUDO SXUSRVH $& VZLWFKLQJ ,W FDQ EH XVHG DV DQ 21 2)) IXQFWLRQ LQ DSSOLFDWLRQV VXFK DV GDVWKLHRDQWLQGXFWLRQ PRWRU VWDUWLQJ FLUFXLWV RU DV SURWHFWLRQ LQ OLJKW GLPPHUV PRWRU VSHHG FRQWUROOHUV -67) &: VQXEEHUOHVV WUDQVLVWRU VZLWFKLQJ IRU XVH RQ LQGXFWLYH ORDGV VXFK DV VROHQRLGV RU SRZHU UHOD\V -67) &: SURYLGHV VXSSUHVVLRQ YROWDJH RI 9506 FRPSO\LQJ ZLWK 8/ VWDQGDUGV)LOH UHI (3DFNDJH 72) LV 5R+6 FRPSOLDQW

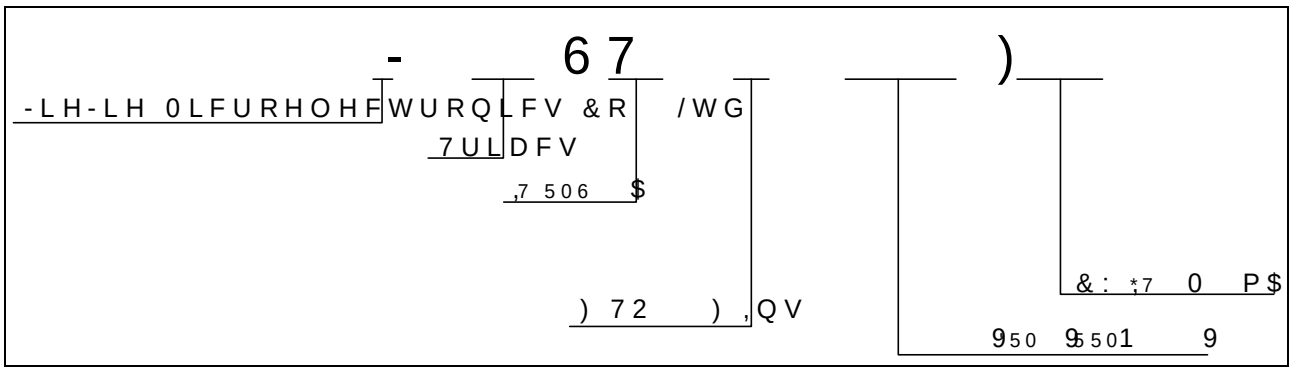
D /E & dhZ ^

^K>hd D y/DhD Z d/E'^

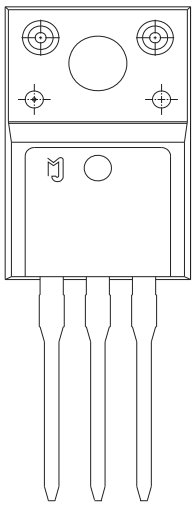
3DUDPHWHU	6\PERO	9DOXH		8QL
6WRUDJH MXQFWLRQ WHPSHUDWXUH	Vwj			
2SHUDWLQJ MXQFWLRQ WHPSHUDWXUH	UDQJH			
5HSHWLWLYH SHDN RII VWDWH	506		9	
5HSHWLWLYH SHDN UHYHUVH 506	506		9	
506 RQ VWDWH &XUUHQW	7 ,7 506		$	WOÀ

$YHUDJH JDWH SRZHU GLVVLSDWLRQ 7

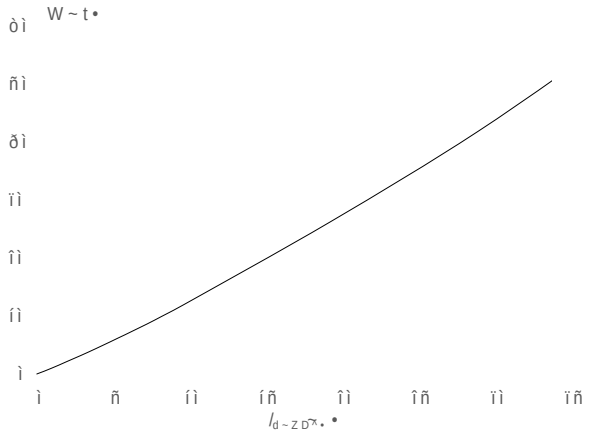
KZ Z/E' /E&KZD d/KE



D Z</E'

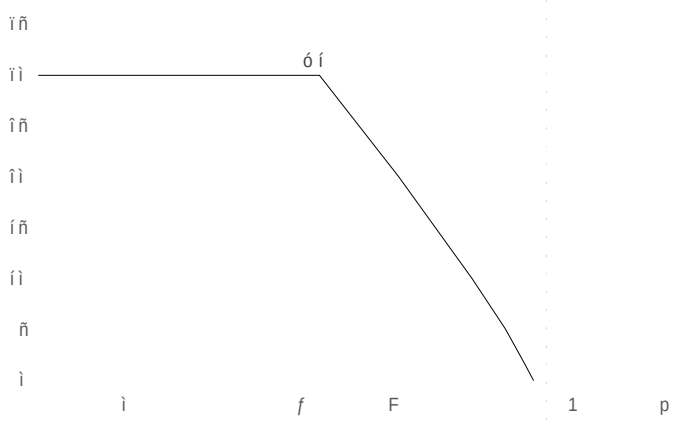


),* 0D[LPXP SRZHU GLVVLSDWLRQ RQ VWDWH FXUUHQW

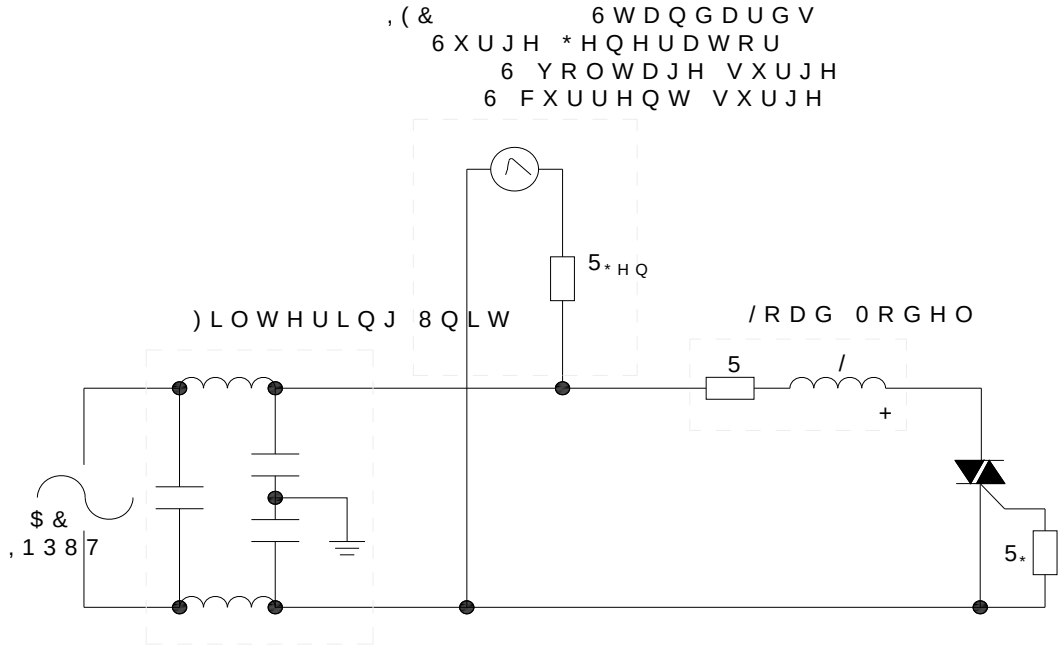


Y)H,*UV5X0/6 5RG VWDWH FXUUHQW YH RQ VWDWH FXUUHQW

WHPSHUDWXUH



),* Ö7HVW FLUFXLW IRU LQGXFWLYH DQG VWUDLQVHQVLWLYH OR



> &KZD/E' E ^K> Z/E'

5HIHU WR WKH DSSOLFDWLRQ QRWH [illegible] -LH-DH] Œ} o šŒ}v] •X

-67) &:

W < ' D , E/ > d



,QIRUPDWLRQ IXUQLVKHG LQ WKLV GRFXPHQW LV EHOLHYHG WR EH DFFXUDWH +
-LDQJVX -LH-LH 0LFURHOHFWURQLFV &RRS\UHVSRQVLEOH QRU IRU DQ\ LQIULQJHPHQWV RI SDWHQWV RU RWKHU ULJKWV RI WKLUG SDUWLHV ZKLFK PD\ UHVXOW IURP WKH XVH RI WKLV GRFXPHQW IRU DQ\ SXUSRVH
LQ WKLV GRFXPHQW LV VXEMHFW WR FKDQJH ZLWKRXW QRWLFH
VLJQHG -LDQJVX -LH-LH 0LFURHOHFWURQLFV &RRS\ULJKW DJUHHPHQW
3URGXFWV DQG LQIRUPDWLRQ SURYLGHG LQ WKLV GRFXPHQW
-LDQJVX -LH-LH DVVXPH\ RU LPSO\ DQ\ UHVSRQVLELOLWLHV RU OLDELOLWLHV
SDUWLHV ZKLFK PD\ UHVXOW IURP WKH XVH RI WKLV GRFXPHQW
VXSHUVHGHV DQG UHSODFHV DOO LQIRUPDWLRQ SUHYLRX
LV D UHJLVWHUHG DQJJXG-LHD-UHN RLF-UR H/HFWURQLFV &
&RS\ULJKW -LDQJVX -LH-LH 0LFUR&RHO/HFWURQLFV &R/WG $OO UHVL