-67 = %: $75,$& 5HY $

## ^ Z/Wd/KEW

7KH -67 = %: WXULWDE ELOVHVIRU JHQHUDO SXUSRVH $& VZLWFKLQJ ,W FDQ EH XVHG DV DQ 21 2)) IXQFWLRQ LQ DSSOLFDWLRQV VXFK DV FKDUJHU FRQWUROOHUV XQLQWHUUXSWLEOH SRZHU VXSSOLHV VWDUWLQJ FLUFXLWV IRU PRWRUV VROHQRLG GULYHUV PRWRU VSHHG FRQWUROOHUV -67 = %: VQXEEHUOHVV WUDQVLVWRUV SHUPDQHQW PDJQHW DC PRWRUV IRU XVH RQ LQGXFWLYH ORDGV %HQHILWV LQFOXGH ORZ FRVW SDG -67 = %: SURYLGHV EHWZHHQ VXSSO\ YROWDJH RI 9506 FRPSO\LQJ ZLWK 8/ VWDQGDUGV )LOH UHI ( 3DFNDJH 72 3 LV 5R+6 FRPSOLDQW

## D /E & dhZ ^

| 6\PERO | 9DOXH | 8QLW |
|---|---|---|
| ,7 506 | | $ |
| 9'50 9$50 | | 9 |
| ,*7 | | P$ |

## ^K>hd D y/DhD Z d/E'^

| 3DUDPHWHU | 6\PERO | 9DOXH | | 8QL |
|---|---|---|---|---|
| 6WRUDJH MXQFWLRQ WHPSHUDWXUH | 7 VWJ | 7 | | |
| 2SHUDWLQJ MXQFWLRQ WHPSHUDWXUH | UDQJH | 7 | | |
| 5HSHWLWLYH SHDN RII VWDWH 9 | 50 YROWDJH | 7 | 9 | |
| 5HSHWLWLYH SHDN UHYHUVH 9 | 506 YROWDJH | 7 | 9 | |
| 506 RQ VWDWH &0 FXUUHQW | 7 ,7 506 | | $ | |
| 1RQ UHSHWLWLYH VXUJH SHDN RQ VWDWH FXUUHQW IXOO F\FOH PV W | ,760 | | $ | |
| 1RQ UHSHWLWLYH VXUJH SHDN RQ VWDWH FXUUHQW IXOO F\FOHPV W | | | | |
| ,W YDOXH IRU PXVW Q J W | ,W | | $ V | |
| &ULWLFDO EDWH RI WDLWHFXUUHQW ;h,*7 I +] 7 | G, GW | | $ V | |
| 3HDN JDWH FXUUHQW W | ,*0 | | $ | |

| | | | |
|---|---|---|---|
| $YHUDJH JDWH SRZHU GLVVLSDWLRQ 7 | | | |
| 3HDN JDWH SRZHU | | | : |
| 3HDN SXOVH YROWDJH QRQ UHSHWLWLYH RII VWDWH ),* | | | |

> dZ/ > , Z d Z ^d/X QOHVV RWKHUZLVH VSHFLILHG

| 6\PERO | 7HVW &RQGLWLRQ | | 4XDGUDQW | | 9DOXH |
|---|---|---|---|---|---|
| ,* 7 | 9 9 5 | | 0$; | | P$ |
| 9* 7 | | | 0$; | | 9 |
| 9* ' | 9 9'50 7M 5/ N | | 0,1 | | 9 |
| / | ,* *,7 | | 0$; | | P$ |
| ,+ | ,7 P$ | | 0$; | | P$ |
| G9 GW 99 *DWH 2SHQ 7 | | | 0,1 | | 9 V |
| G, GW F G9 GW F 9 V | | | 7 0,1 | | $ PV |
| W Q | ,* P$ $, P$ 5, P$ 7M | | 7<3 | | V |
| W I | | | | | |

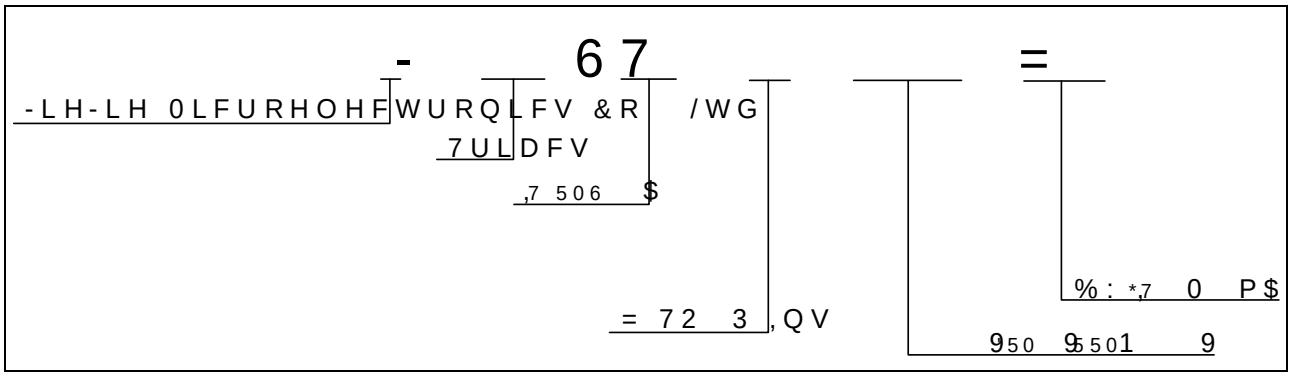
^d d/ , Z d Z/^d/ ^

| 6\PERO | 3DUDPHWHU | | 9DOXH 0$; | | 8QLW |
|---|---|---|---|---|---|
| 970 | 70 $,SW V | M7 | | | |
| 972 | 7KUHVKROG YROWDJH | M | 7 | 9 | |
| 5' | '\QDPLF UHVLVWDQFH | M | 7 | P | |
| ,'50 | 9 9'50 95 9550 | 7M | | $ | |
| ,550 | | 7M | | | |

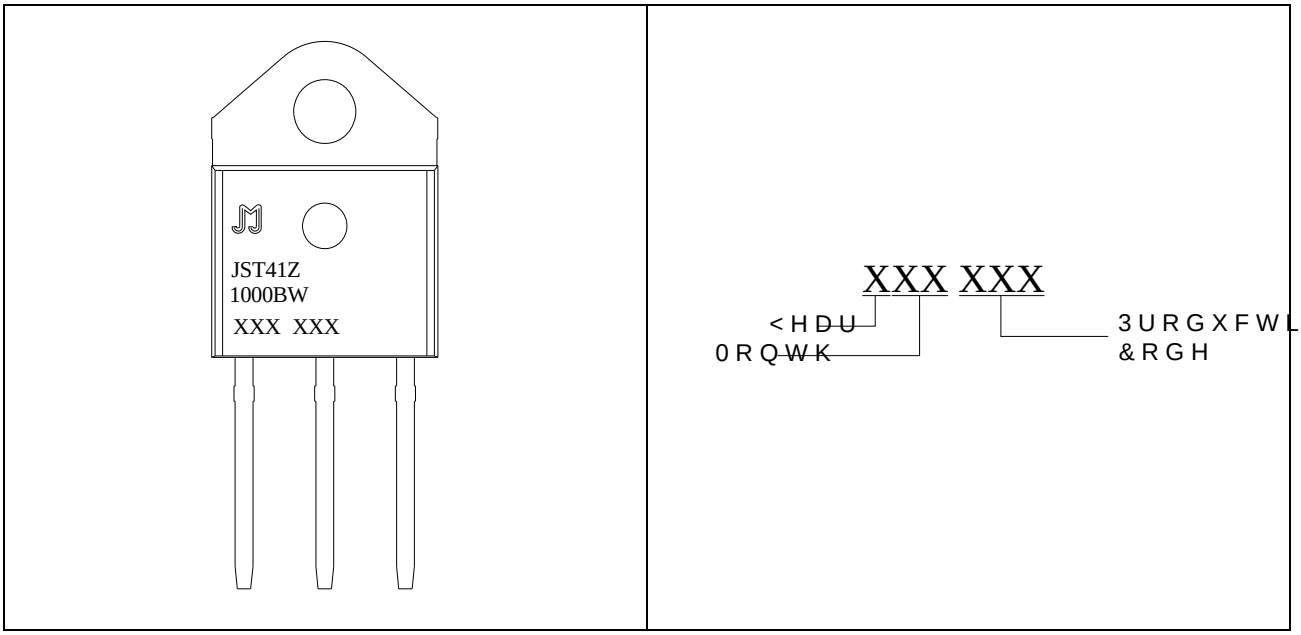
d, ZD > Z ^/^d E ^

| 6\PERO | 3DUDPHWHU | 9DOXH | | 8QLW |
|---|---|---|---|---|
| 5WK M | FMXQFWLRQ WR FDVH $& | | : | |
| 5WK M | DMXQFWLRQ WR DPELHQW $& | | : | |

## KZ Z/E' /E&KZD d/KE

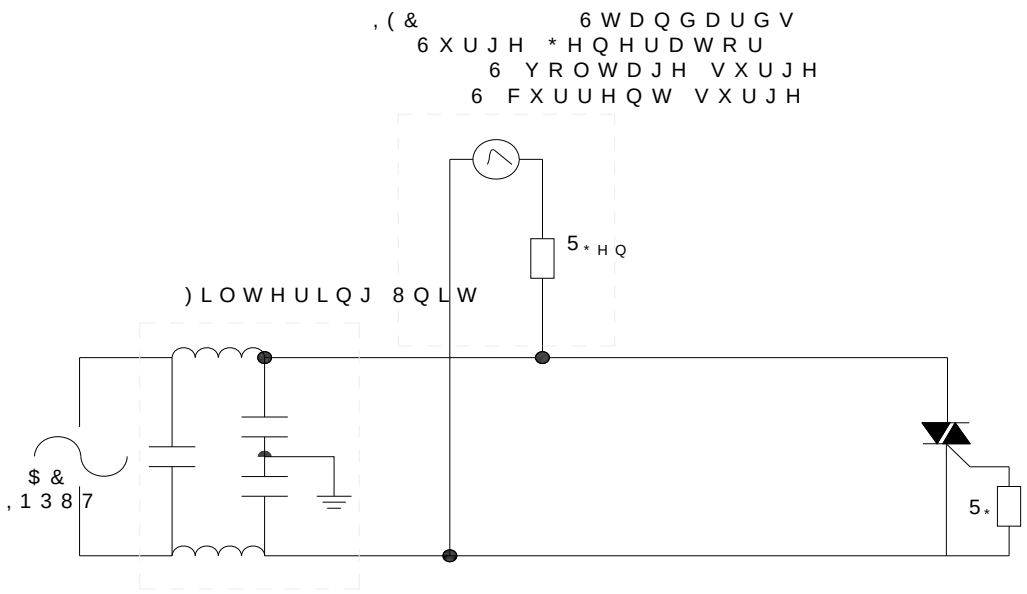



## D Z</E'



),* 0D[LPXP SRZHU GLVVLSDWLRQ Y)H*UV5X0/6 5R6 VWDWH FXUUHQW YH
RQ VWDWH FXUUHQW WHPSHUDWXUH

),* Ö7HVW FLUFXLW IRU LQGXFWLYH DQG VWDWLF ORDGV



KZ Z/E' /E&KZD d/KE

| 2UGHU FR | 9ROWD 9'50 9 | ,*7 P$ | 3DFNDJ | %DVH T SFV | 'HOLYHU\ PRGH |
|---|---|---|---|---|---|
| -67 = %: | | | 72 3 ,QV | | 7XEH |

'RFXPHQW 5HYLVLRQ +LVWRU\

| 'DWH | 5HYLVLRQ | &KDQJHV |
|---|---|---|
| 0D\ | $ | /DVW XSGDWHG |
| 2FW | $ | 5HYLVHG &$*( 0(&+$1,&$/ '$7$ |

W < ' D , E/ > d



,QIRUPDWLRQ IXUQLVKHG WR EH DFFXUDWH
-LDQJVX -LH-LH 0LFURHOHFWURQLFV &RUS RI XVH ZLWKRXW FRQVLGHUDWLRQ IRU LWV FRUUHFWQHVV RU LPSDFW RQ SDWHQW RU RWKHU WKLUG SDUW\ ULJKWV WKDW PD\ UHVXOW
LQ WKLV GRFXPHQW GRHV QRW JUDQW DQ\ OLFHQVH XQGHU DQ\ SDWHQW RU RWKHU LQWHOOHFWXDO SURSHUW\ ULJKW
VLJQHG MHF ZX €`PPÐ p€ €`Á(E Bu OLDW ZKHQ DQP WRQ I( G

XRQ I( G LW R OLW PD D]L p€ „E